Leaftron®

LTG12-26

Valve-regulated lead-acid battery

Cyclic | AGM Gel | Solar & Wind | EV | Mobility | Railway

DEEP CYCLE GEL SERIES

Characteristics

Nominal voltage		12V (6 cells per unit)
Nominal capacity at 20 hours rate/10.5V (25°C)		26Ah
Capacity (25°C)	10 Hours rate/10.8V	23.8Ah
	5 Hours rate/10.8V	21.2Ah
Terminal type		T12/T4
Torque		3.0±0.6N.m
Approx. internal resistance (25°C)		11.0mΩ
Dimensions	Length	166±2mm (6.54inch)
	Width	175±2mm (6.89inch)
	Height	125±2mm (4.92inch)
	Total height	125±2mm (4.92inch)
Design Life (stand-by)	JIS at 25°C	10 years
	Eurobat at 20°C	10/12 years
Weight		8.80kg (19.40lbs)±4%
Nominal operating temperature		25°C±3 (77±5°F)
Operating temperature range	Discharge	-15°C~50°C (5°F~122°F)
	Charge	-10°C~50°C (14°F~122°F)
	Storage	-20°C~50°C (-4°F~122°F)
Float charging voltage at 25°C		13.6V~13.8V
Cyclic charging voltage at 25°C		14.4V~14.7V
Temperature compensation	Float charge	-18 mV/°C/Block
	Cycle charge	-30 mV/°C/Block
Max. charging current (A)		5.2A
Max. discharge current for 5 seconds		360A
Self discharge rate (25°C)		≤3%/month
Battery container ABS UL94-HB		V-0 optional

Overview

Leaftron AGM GEL Series are manufactured following the highest demands in the deep cycle and renew-able energy applications. The batteries use colloidal or foamed silica gel to immobilize the electrolyte, which further enhances the cycling stability. Available in top and front terminal types.

Dimensions & Terminal Type (mm)

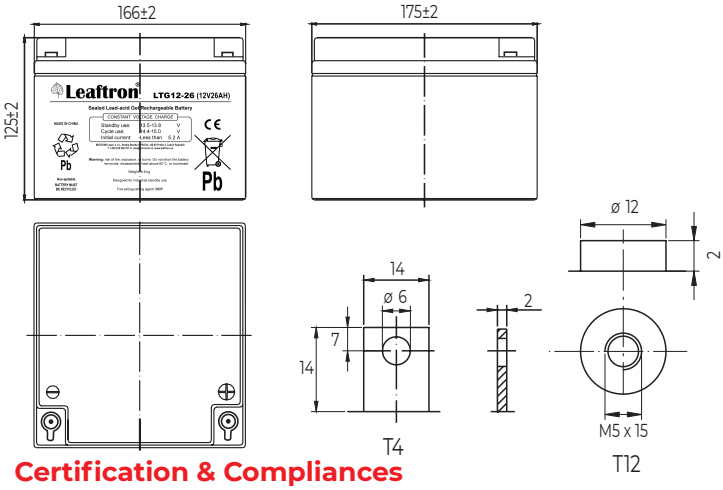

Certification & Compliances

Compliant to: EUROBAT, RoHS, WEEE's and Reach.
Manufactured according to IEC 60896-21 / 22

Construction

Component	Positive Plate	Negative plate	Container	Separator	Electrolyte	Sefety valve	Terminal
Raw material	Lead dioxide	Lead	ABS (V-0 opt.)	AGM	Sulfuric Acid Gel	Rubber	Copper

Constant current discharge characteristics at 25°C

(Ampere/battery)

F.V/Time	5min	10min	15min	30min	60min	2h	3h	4h	5h	10h	20h
9.60V	81.6	55.7	46.4	27.0	16.4	9.28	6.54	5.30	4.46	2.46	1.34
9.90V	79.2	54.0	45.3	26.5	16.2	9.22	6.50	5.27	4.43	2.45	1.34
10.2V	75.9	51.8	43.6	25.7	15.8	9.14	6.46	5.23	4.40	2.44	1.33
10.5V	72.6	49.5	42.1	25.1	15.5	9.01	6.41	5.19	4.37	2.42	1.33
10.8V	68.6	46.7	39.9	24.1	15.0	8.78	6.22	5.04	4.24	2.38	1.30

Constant power discharge characteristics at 25°C

(Watts/battery)

F.V/Time	5min	10min	15min	30min	60min	2h	3h	4h	5h	10h	20h
9.60V	911	628	529	310	190	109	77.7	63.1	53.3	29.5	16.1
9.90V	884	609	516	304	187	108	77.3	62.7	52.9	29.4	16.1
10.2V	847	584	497	294	183	107	76.7	62.3	52.6	29.3	16.0
10.5V	811	559	480	287	179	105	76.2	61.9	52.2	29.1	15.9
10.8V	765	527	455	277	174	103	73.9	60.0	50.6	28.5	15.6